A	B	C	D	E	F	G	H

To contact us - Tel +44 (0)1279-729051 email: info@gpowerproducts.co.uk

IF IN DOUBT ASK

All information contained in this document is confidential and the copyright reserved

Used on dwg MANUAL

P100903

Quantity D	Quantity C	Quantity B	Quantity A	No	Description	Detail No	Nat Com Code	OEM Part No
				1	FIXED AND MOVING CONTACT	P100042/A	35-37-881	B3261304 Item 1

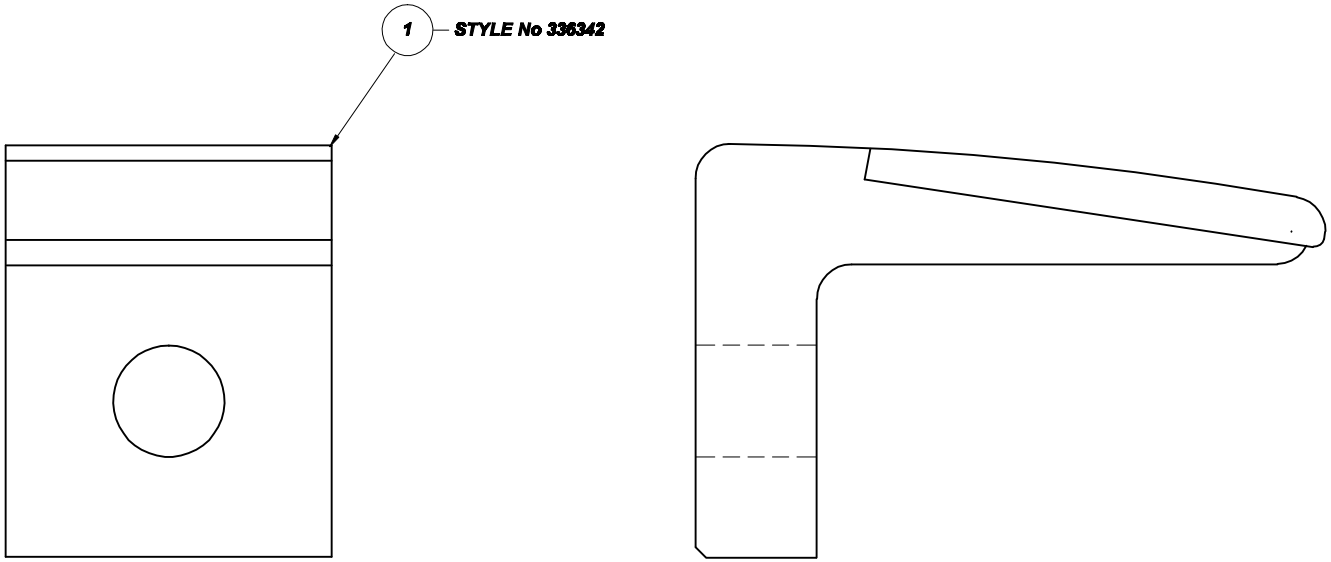

No	Revision notes	Date/Sig	No	Revision notes	Date/Sig	No	Revision notes	Date/Sig

SUB STATION SUPPLY SOLUTIONS

Scale NTS | Drawn ACS | Checked AJT | Approved AJT | Date 26/03/10

PATTERN CONTACTS FOR AEI/MET VICK M102 & M103 TAPCHANGERS

RE No | Sheet No | P100903 | REV 0

Form No 3-7-3.0-A3 Rev B